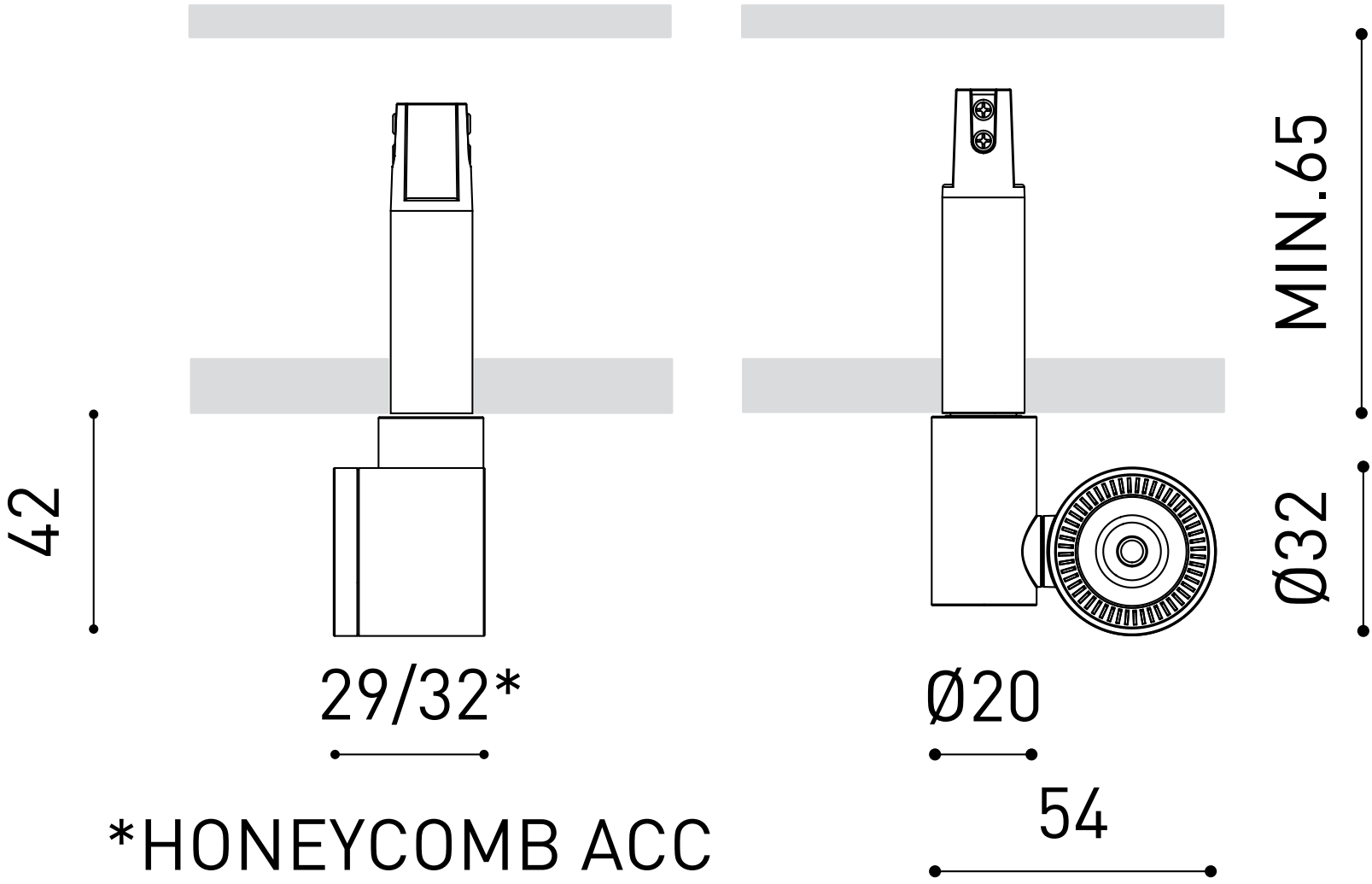

*HONEYCOMB ACC